LUMEL
EVERYTHING COUNTS

extCZIP®-PRO protection relay

digital protection, automation, measurements, control, registration and communication

New !!!

Under-impedance protection against interfacial short-circuit effects in MV lines

Replaces classic overcurrent short-circuit protections where selectivity and the necessary sensitivity cannot be achieved

extCZIP®-PRO extended version of CZIP® system

- flexibility in selecting the number of available input and output ports
- additional communication ports

www.lumel.com.pl

System **CZIP®**

digital protection, automation, measurements, control, registration and communication

extCZIP®-PRO digital protection relays for medium-voltage switchgear and **extCZIP®-2R PRO** ATS automation are new hardware versions of **CZIP®** system devices. **extCZIP®-PRO** series controllers feature extensive flexibility in the choice of available input, output and communication ports.

CZIP® system hardware is 100% Polish product, developed by polish constructors, in collaboration with Institute of Power Engineering at the Poznan University of Technology. Polish technical ideas and long-term experience with the protections segment mean a very good understanding of the needs and close collaboration with local Polish power grid operators. Product development in collaboration with Polish science guarantees application of state-of-the-art and unique solutions.

- **extCZIP®-PRO – extended version of the digital protection relay for MV switchgear in professional and industrial power engineering**
- **extCZIP®-2R PRO – ATS (automatic transfer switch) hardware for MV switchgears**
- **CZIP®-Set – utility software for all CZIP® system devices, including extCZIP®-PRO**

Unique protection by **CZIP®** system

- under-impedance protection against interfacial short-circuits – **NEW !!!**
- high-resistance earth fault detection (up to 8 kΩ),
- selective earth fault protection in earthing transformer bay and earth circuit.

extCZIP®-PRO protection relay for power industry

- software for all switchgear bays in a single device,
- ATS with **extCZIP®-2R PRO**,
- predefined switchgear bay settings,
- **support for programmable logic**,
- 7"TFT colour LCD screen, 800x480, featuring a touch panel,
- presentation of bay synoptic block diagram with representation of switch states,
- control of switches from synoptic screen and from tele-mechanics (up to 6 switches),
- presentation of recorded events, measured values and states of outputs and inputs,
- **28, 42 or 56 opto-isolated binary inputs**,
- **20, 30 or 40 relay outputs**,
- 14 two-colour programmable LEDs, with description on the screen,
- ON and OFF buttons – to control the field circuit breaker using device keyboard,
- signaling LEDs: TRIP- circuit breaking trip, LRC- lock remote control, BF- bay fail
- 512 MB of internal memory to record samples of error log, event log, power measurements,
- time synchronisation via Ethernet using SNTP,
- independent communication interfaces: USB, 2 x RS-485, Ethernet 10/100 BASE-TX (optional fibre optic port and **CAN-BUS/RS-485**),
- communication protocols: DNP 3.0, IEC 60870-5-103 and 104, IEC 61850 Modbus® ASCII / RTU (optional PPM2 protocol on **CAN-BUS/RS-485 port**),
- 2-bit monitoring of the status of all connectors.

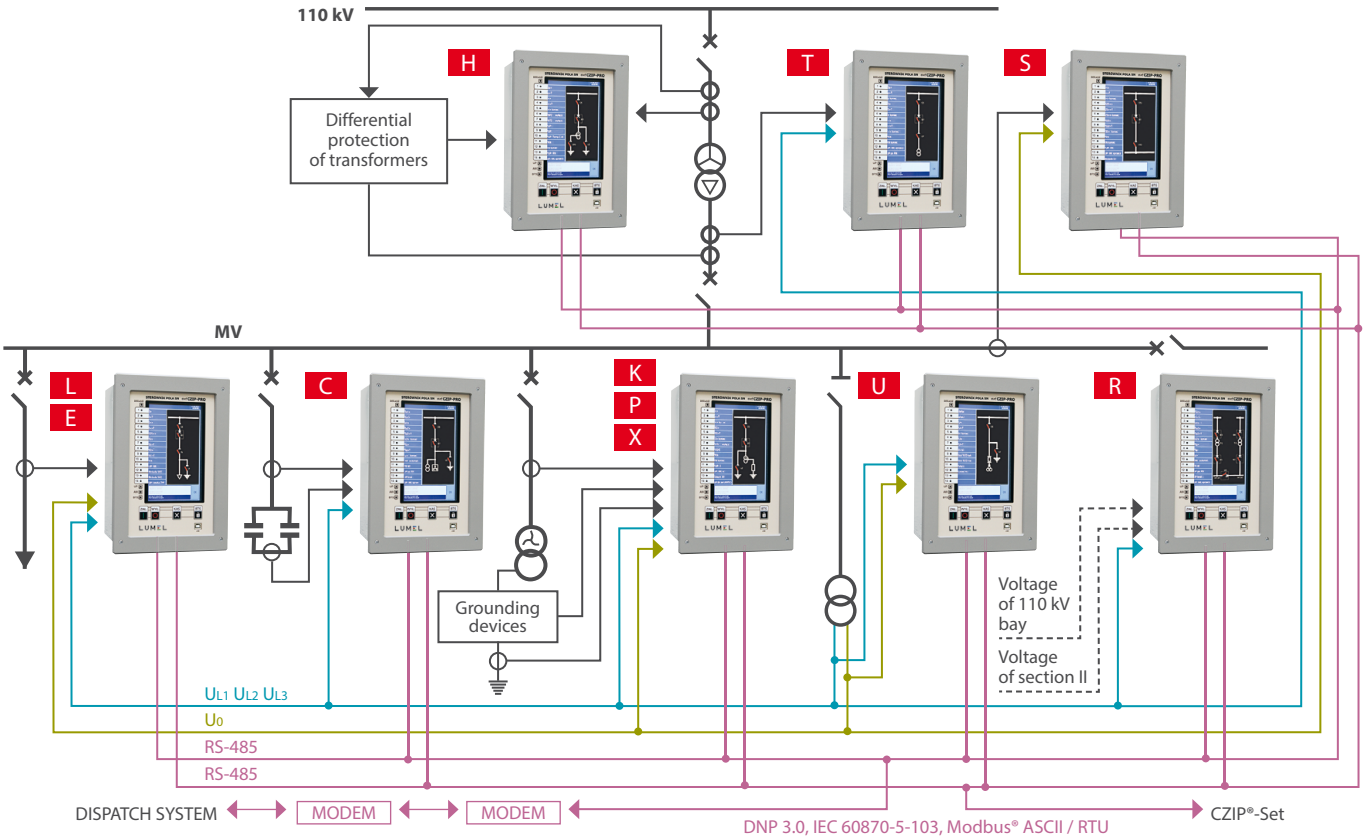

Protections	L	E	Z	T	C	K	P	X	U	S	H	R
Three-step overcurrent protection against interfacial short-circuit effect	•[1]	•[1]	•[1]									
Directional interlock to overcurrent protection for each of the steps	•	•	•									
Current asymmetry criterion based on opposite current component	•	•	•	•		•	•	•				
Instantaneous protection against short-circuit effects	•	•	•	•	•	•	•	•		•	•	
Under-impedance protection against the effects of phase-to-phase short circuits	•	•	•									
Zero-sequence current earth fault protection	•	•	•	•	•					•	•	
Zero voltage protection as inrush element for other protections	•	•	•			•	•	•		•		
Zero voltage protection as stand-alone criterion		•	•	•					•			
Zero-sequence current earth fault protection in neutral point grounding circuit						•	•	•				
Admittance based earth fault protection	•	•	•									
Comparatively admittance based earth fault protection	•	•	•									
Conductance based earth fault protection (directional and non-directional)	•[4]	•[4]	•[4]							•[2]		
Susceptance based earth fault protection, directional	•	•	•									
Over-frequency protection		•[3]	•[3]									
Under-frequency protection		•[3]	•[3]						•			
df/dt protection		•[3]	•[3]						•			
Overcurrent element of busbar protection interlock	•	•	•		•	•	•	•	•			
Directional interlock to overcurrent element of busbar protection interlocking	•	•	•									
Overcurrent element combined with busbar protection										•		
Busbar protection decision element			•	•								
Selective protection against effects of earth faults in grounding transformer and grounding circuit						•	•	•				
Overvoltage protection		•[3]	•[3]	•	•							
Under-voltage protection		•[3]	•[3]									
Overcurrent protection against overload effects				•	•						•	
Overcurrent time-delayed protection against interfacial short-circuit effects					•							
Overcurrent protection against internal short circuits effects					•							
Phase overvoltage protection (criterion: wire voltages)									•			
Phase under-voltage protection (criterion: wire voltages)									•			
Overcurrent-logic busbar protection			•	•						•		
Overcurrent protection against internal interfacial short-circuit effects						•	•	•			•	
Automation protection	**L**	**E**	**Z**	**T**	**C**	**K**	**P**	**X**	**U**	**S**	**H**	**R**
Auto-reclosing (AR)	•	•	•									
Circuit-Breaker Failure Protection			•	•						•		
Capacitor Bank controller				•								
Capacitor bay switch control (clock)					•							
Under Frequency Load Shedding (UFLS): 3 - step									•			
AR/UFLS									•			
In-phase component enforcement automation with controller						•						
Resistor controller							•					
Other	**L**	**E**	**Z**	**T**	**C**	**K**	**P**	**X**	**U**	**S**	**H**	**R**
extCZIP®-PRO in combination with Load Shedding (LS) and AR/LS	•	•	•									
extCZIP®-PRO in combination with circuit-breaker failure protection	•	•	•		•	•	•	•			•	
extCZIP®-PRO in combination with Automatic Transfer Switch (ATS)			•	•			•	•		•	•	
ATS function in power reserve and spinning reserve systems												•
extCZIP®-PRO in combination with gas flow protection				•		•	•	•				
extCZIP®-PRO in combination with external residual current protection											•	
Interlock of overcurrent protection tripping from the second harmonic	•	•	•									
Synchronism test function when switching on lines with local generation		•[5]	•[5]									

[1]Optional settings change after operational first, second or third step switching. [2]Non-directional. [3]With independent AR.
[4]**With built-in adaptive algorithm to support effective detection of high-resistance earth faults.** [5]Optional function.

Intended use of extCZIP®-PRO - substation bays

- **L** feeder bay without power generation
- **E** feeder bay with power generation (including wind power)
- **Z** supply line bay
- **T** MV side of the 110 kV/MV transformer
- **C** capacitor bank
- **K** auxiliary supply in compensated networks (including with isolated neutral point)
- **P** auxiliary supply in networks with neutral earthing resistors
- **X** auxiliary supply in networks with choke/resistor parallel system
- **U** voltage measurement bay
- **S** bus coupler bay
- **H** 110 kV side of the 110 kV MV transformer

Intended use of extCZIP®-2R PRO

- **R** ATS (automatic transfer switch) hardware

Technical specifications

Phase current input circuits		
Rated current I_n		5 A or 1 A
Measurement range		0...192 A
Measurement error	0 A > | 0.35...50 A | < 192 A	< 10% | < 1.5% | < 10%
Rated frequency f_n		50 Hz
Power consumption at $I=I_n$		< 0.5 VA
Phase voltage input circuits		
Rated voltage U_n		100 V
Measurement range		0...130 V
Measurement error in measurement range		< 1.5%
Rated frequency f_n		50 Hz
Power consumption at $U=U_n$		< 0.4 VA
Zero sequence current input circuits		
Rated current I_{0n}		0.5 A
Measurement range		0...5 A
Measurement error	0.02...3.5 A	< 1.5%
Rated frequency f_n		50 Hz
Power consumption at $I=I_{0n}$		< 0.4 VA
Zero voltage input circuits		
Rated voltage U_{0n}		100 V
Measurement range		0...130 V
Measurement error in measurement range		< 1.5%
Rated frequency f_n		50 Hz
Power consumption at $U=U_{0n}$		< 0.4 VA

Bistable input circuits		
Rated input voltage	24 V	220 V
Input voltage range	17...32 V	88...253 V
Current consumption	< 0.25 mA	< 3 mA
Relay output circuits		
Rated voltage	220 V	24 V
Continuous current-carrying capacity	5 A	
Inductive circuit opening		
• 220 V DC, L/R = 40 ms	0.1 A	
• 220 V AC, cos φ = 0.4	2 A	
Circuits with breaker		
Rated voltage	220 V	24 V
Continuous current-carrying capacity	8 A	
Inductive circuit opening		
• 220 V DC, L/R = 40 ms	1.2 A / 300 cycles	
Time - switching of impulse	min. 0.1 s	
Time - switching on impulse	min. 0.1 s	

Other data			
Power supply			
• rated supply voltage	220 V DC 90...**220**...300 V	230 V AC 85...**230**...265 V	24 V DC 19...**24**...65 V
• power consumption		< 20 W	
Environmental conditions			
• ambient temperature		-10...+55°C	
• storage temperature		-20...+70°C	
• altitude above sea level		≤ 2000 m	
• relative humidity		5...95%	
Weight		6 kg	
IEC degree of protection		IP 50	

Dimensions

Rear side mounting

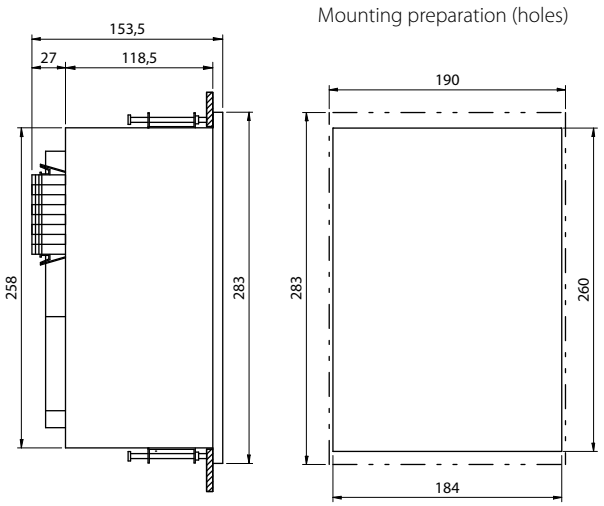

Front side mounting

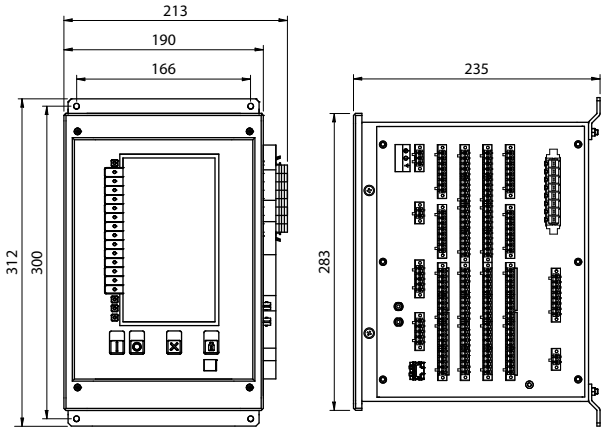

CZIP® system – extCZIP®-PRO software

CZIP®-Set

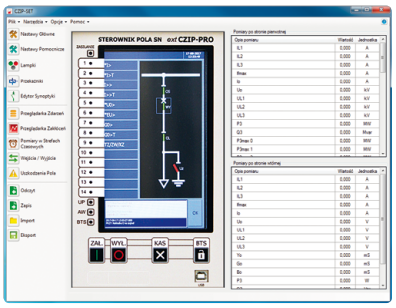

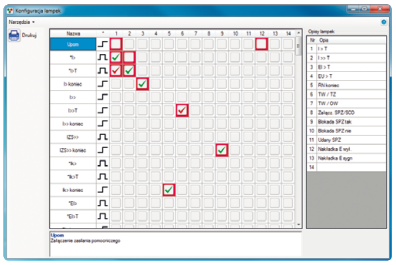

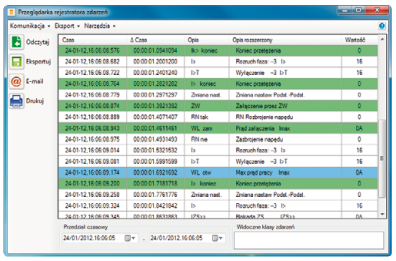

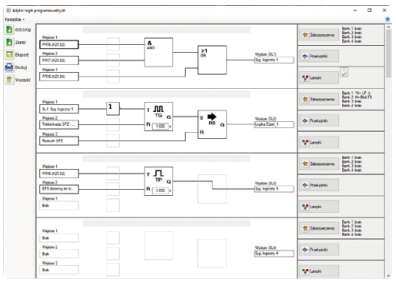

- software supplied with **extCZIP®-PRO** – perfect engineering tool to assist the user in settings, configuration of all available parameters and reading of configuration data, measurement data and event logger data in real time,
- the software also includes a module to read samples stored in the error log and conduct comprehensive evaluation of error data,
- the tool features a programmable logic editor to customise **extCZIP®-PRO** to user's individual solutions and needs,
- the software communicates with **extCZIP®-PRO** devices via RS-485 serial ports, fibre optic cable, USB, Ethernet and CAN-BUS.

LUMEL
EVERYTHING COUNTS

LUMEL S.A.
ul. Słubicka 4, 65-127 Zielona Góra, Poland
tel.: +48 68 45 75 100, fax +48 68 45 75 508
www.lumel.com.pl

Technical support:
tel.: (+48 68) 45 75 143, 45 75 141, 45 75 144, 45 75 140
e-mail: export@lumel.com.pl

Export department:
tel.: (+48 68) 45 75 130, 45 75 131, 45 75 132
e-mail: export@lumel.com.pl

Calibration & Attestation:
e-mail: laboratorium@lumel.com.pl